NASA Global Hawk
ATTREX Payload Integration

Dave Fratello, Payload Manager
August 26, 2010

david.j.fratello@nasa.gov
(661) 276-5783
(661) 47-3426 (cell)

Payload Integration Process

- **Initial Conference (Telecom, visit to DFRC, etc)**
  - **Define instrument requirements, look angle, environment, etc.**
  - **Initial overview of power, data, communications, testing**
  - **DFRC Payload forms submission (to be provided)**
- **DFRC Integration Engineering, Fab**
  - **PI provides solid model of instrument**
  - **DFRC will coordinate engineering – likely use of NGC**
  - **Regular telecoms with PI team and engineering**
- **DFRC visit to PI's lab**
  - **Discuss all aspects of integration, testing, and expected Ops**
- **Initial Integration at DFRC, SIL Bench Testing**
  - **3-5 days at DFRC**
- **Final Integration, CST, Range Flight**

Instrument Arrangement

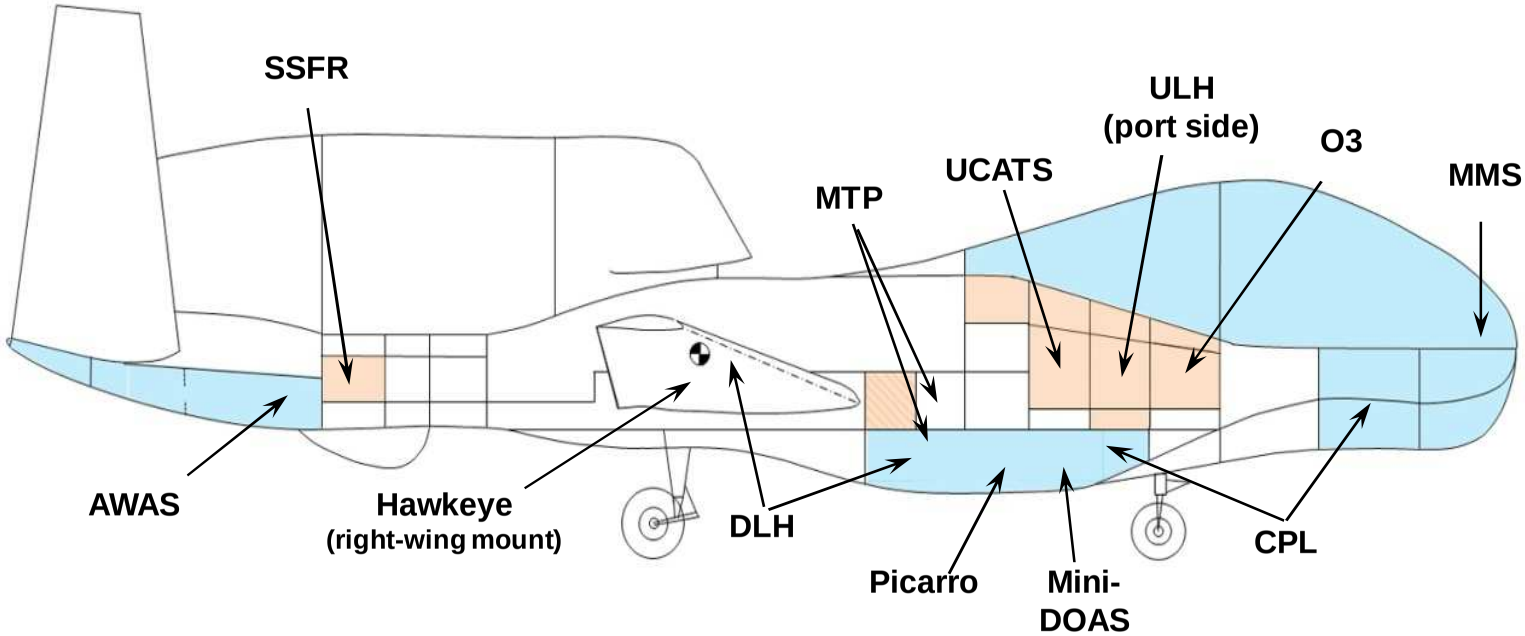

Integration Activity

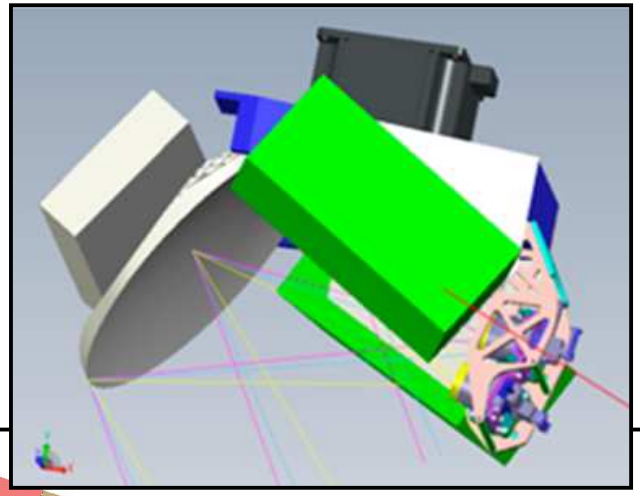

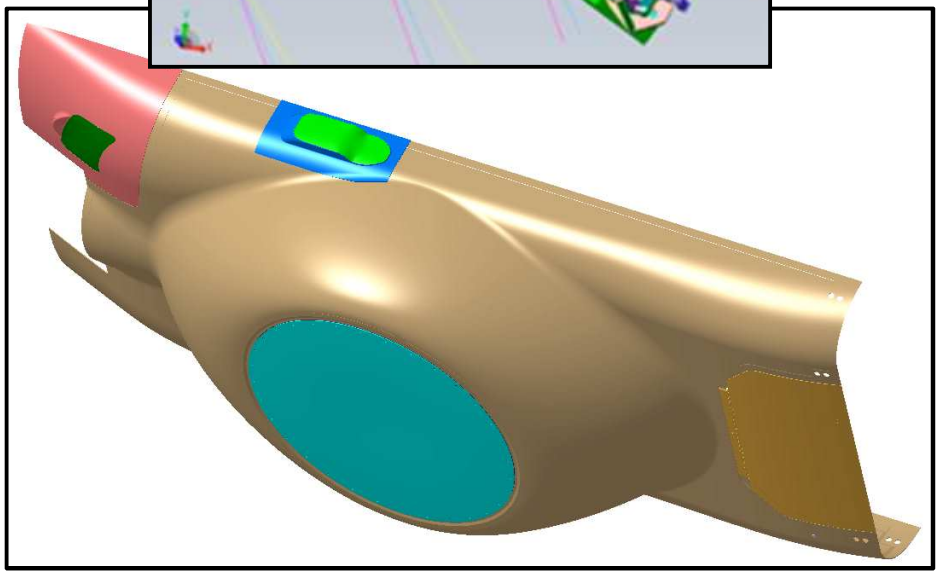

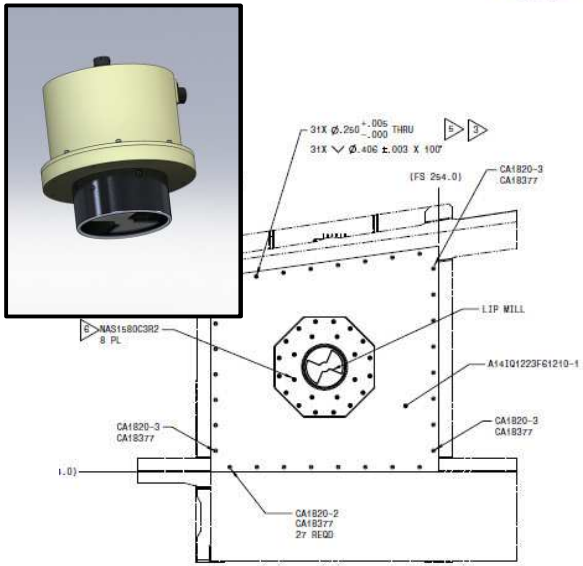

Airborne Payload C3 System

Experiment Interface Panel (EIP) Module Locations

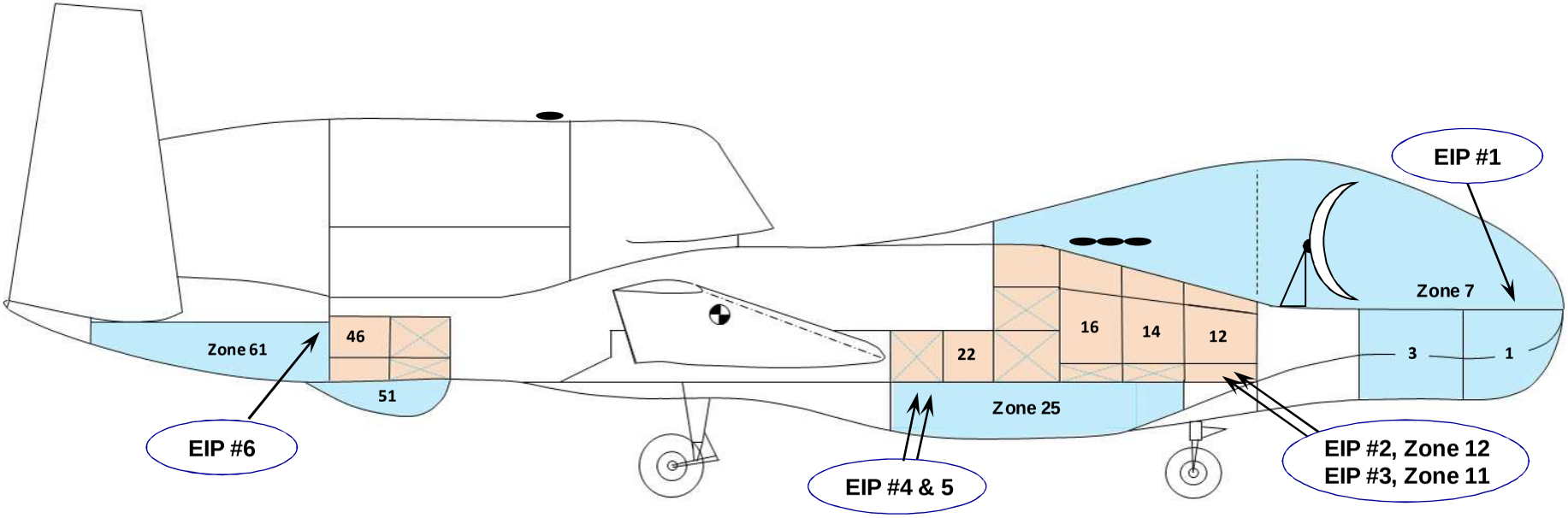

EIP Modules – Zone-25 Details

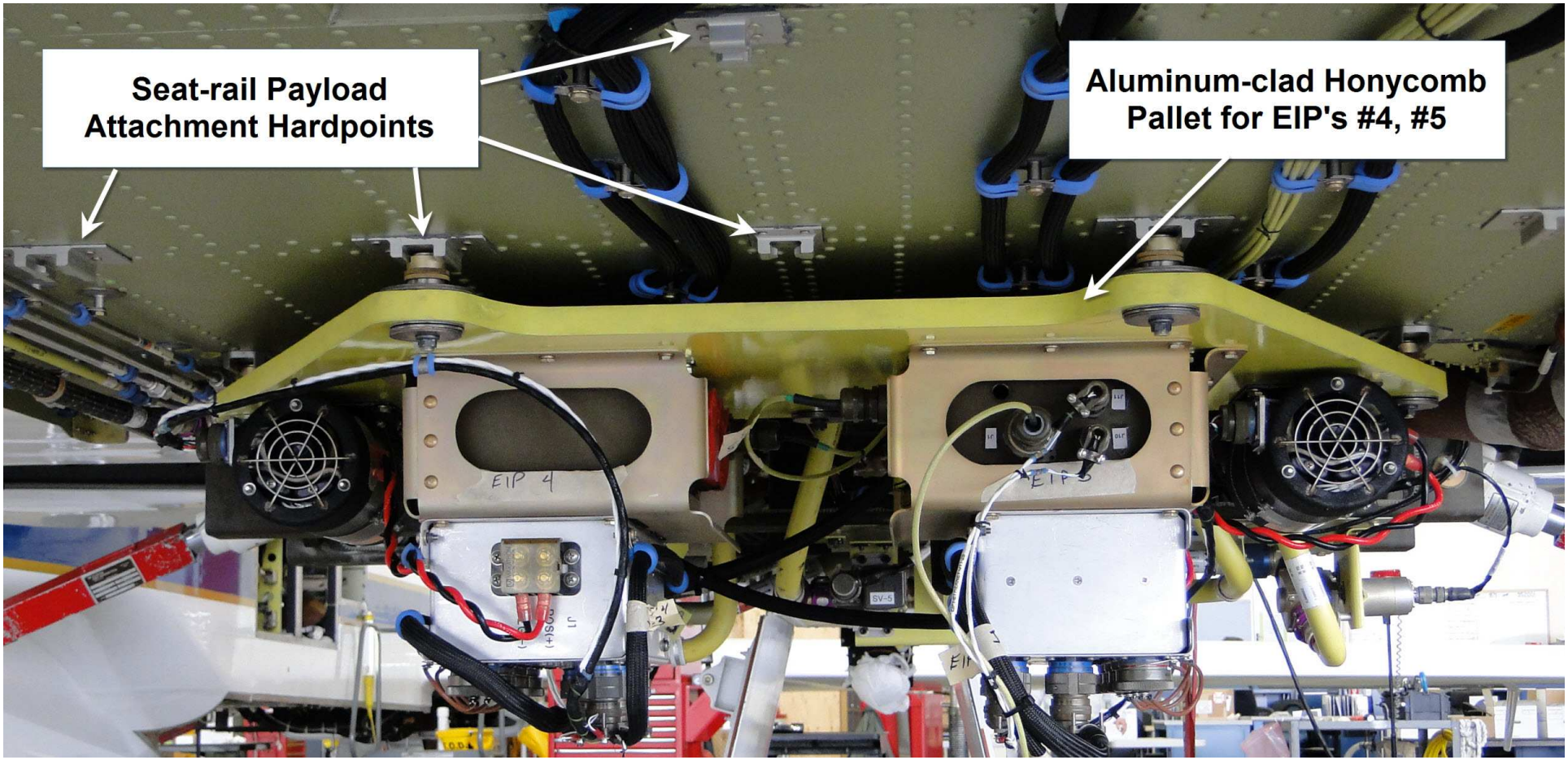

Zone-61 Mount, EIP Module

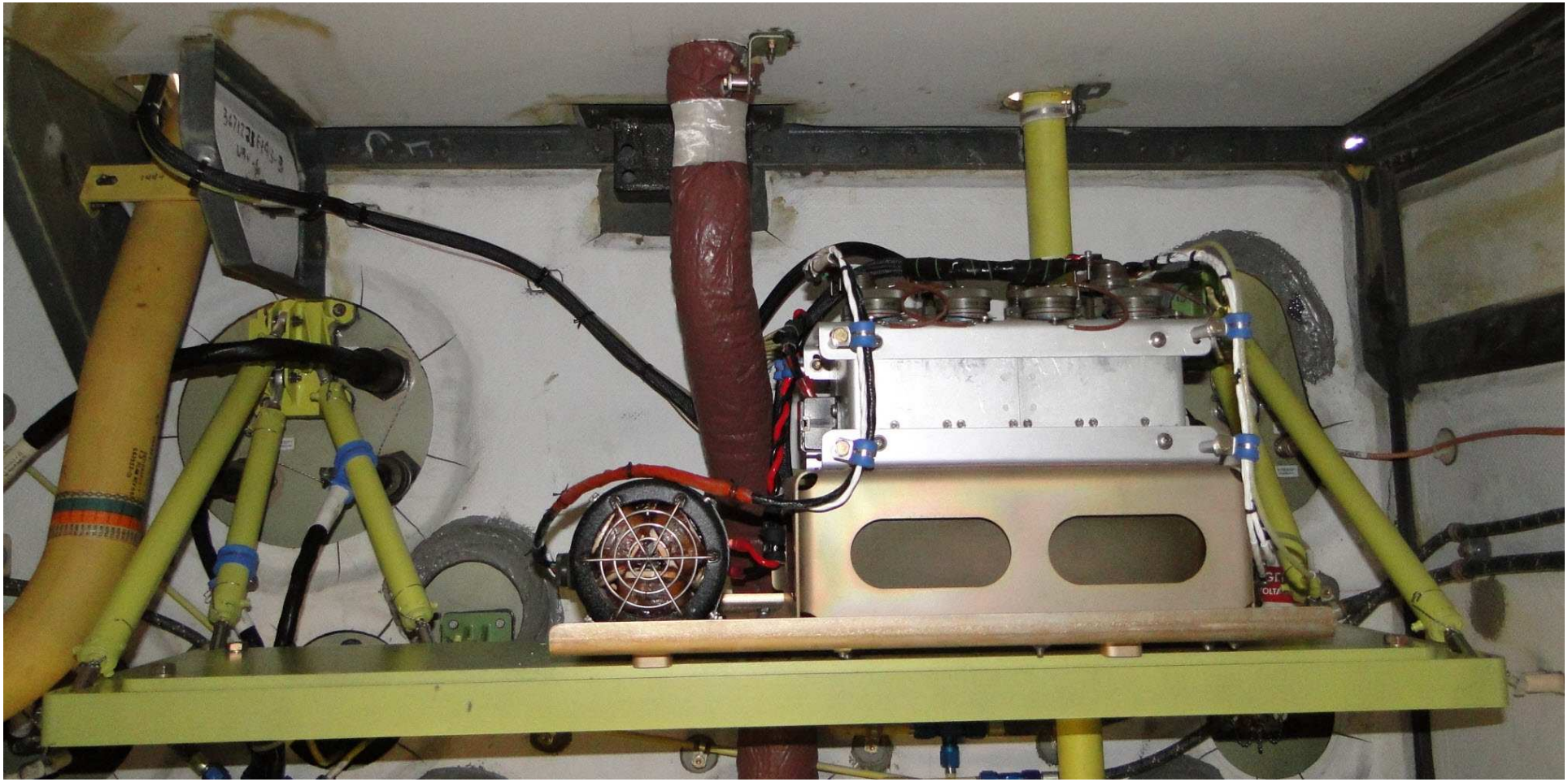

Airborne Payload C3 System

APCS Electronics and Antenna Components

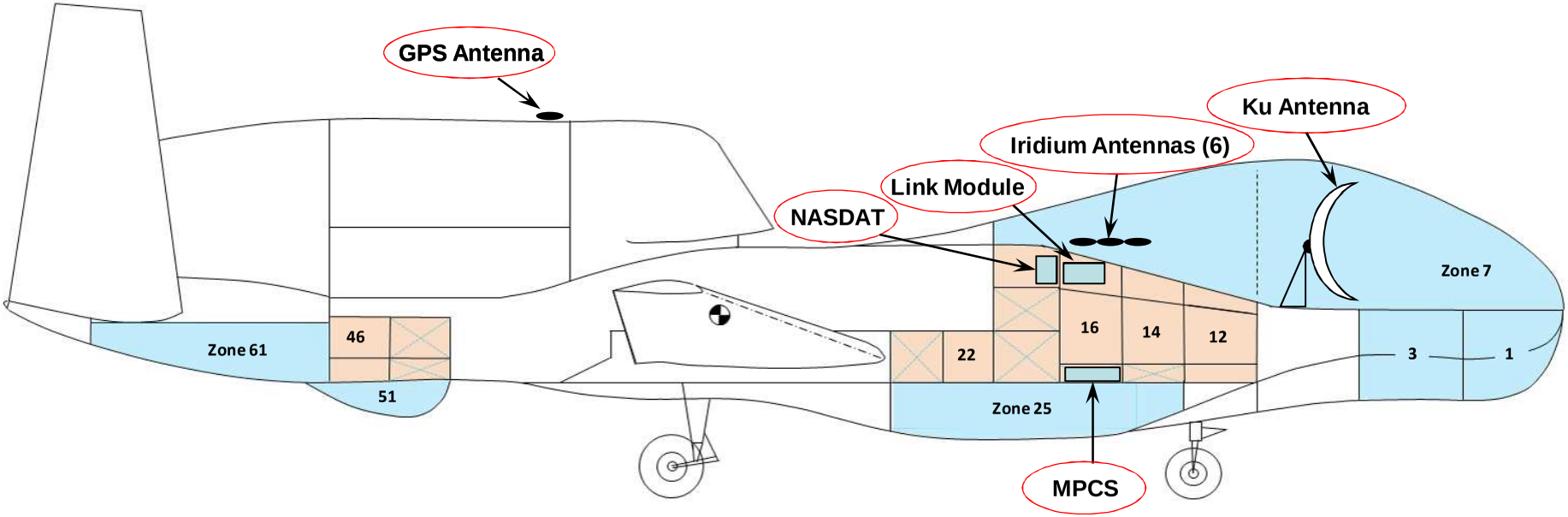

APCS Communication Links

APCS-dedicated
Iridium Antennas

48” Ku-SatCom Antenna

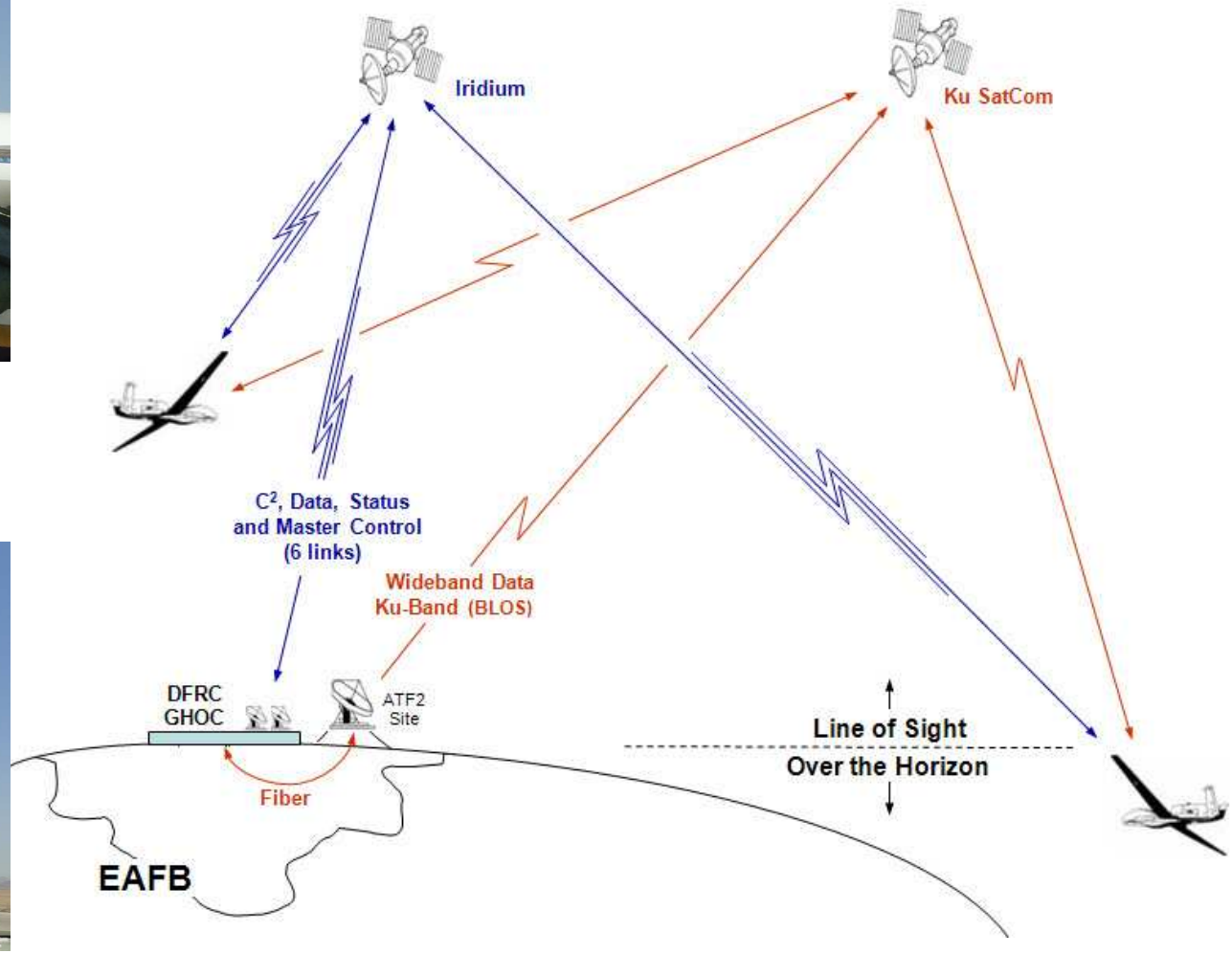

GH Airborne Payload C3 System

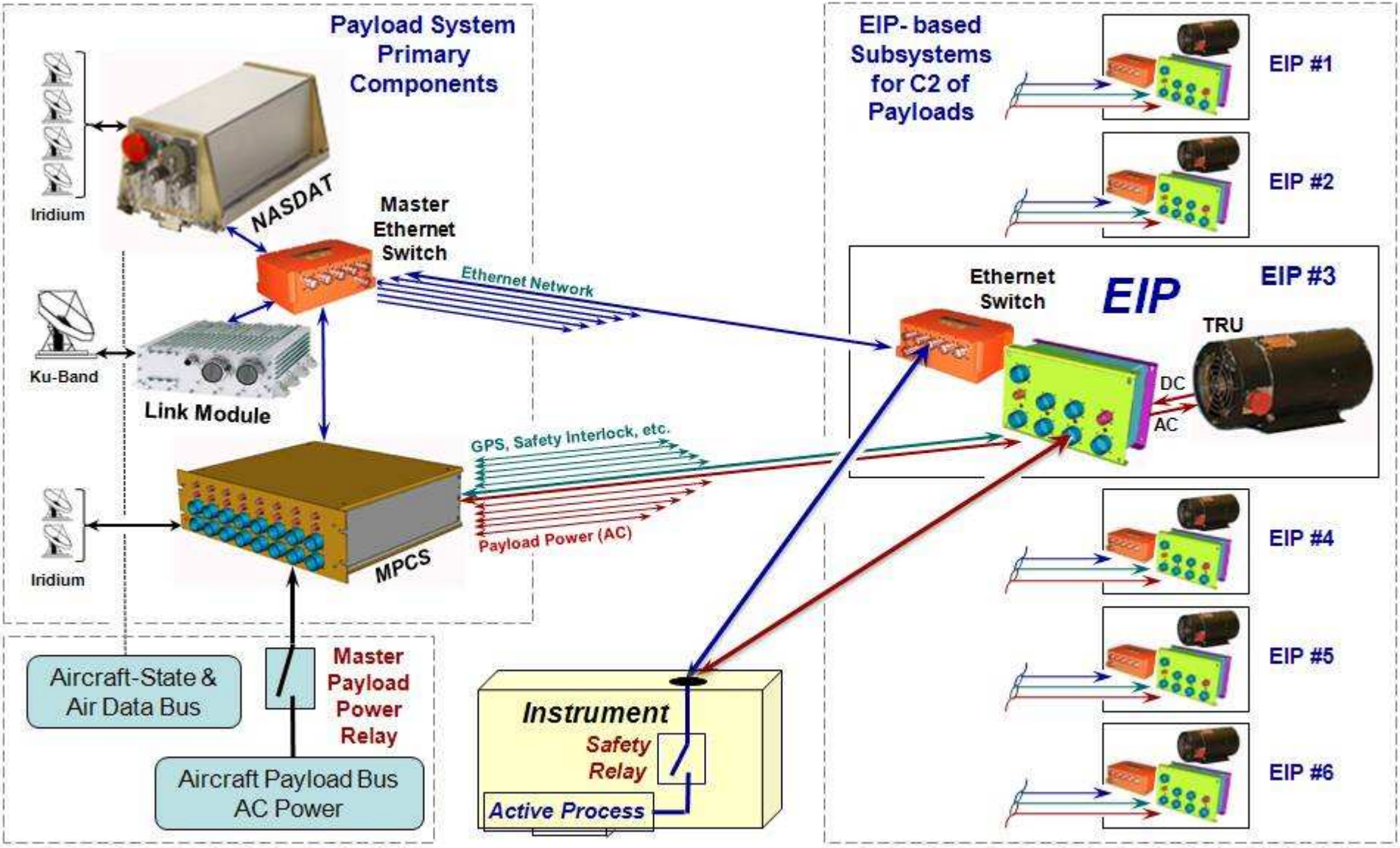

Master Payload Control System

MPCS Electrical/Mechanical Design:

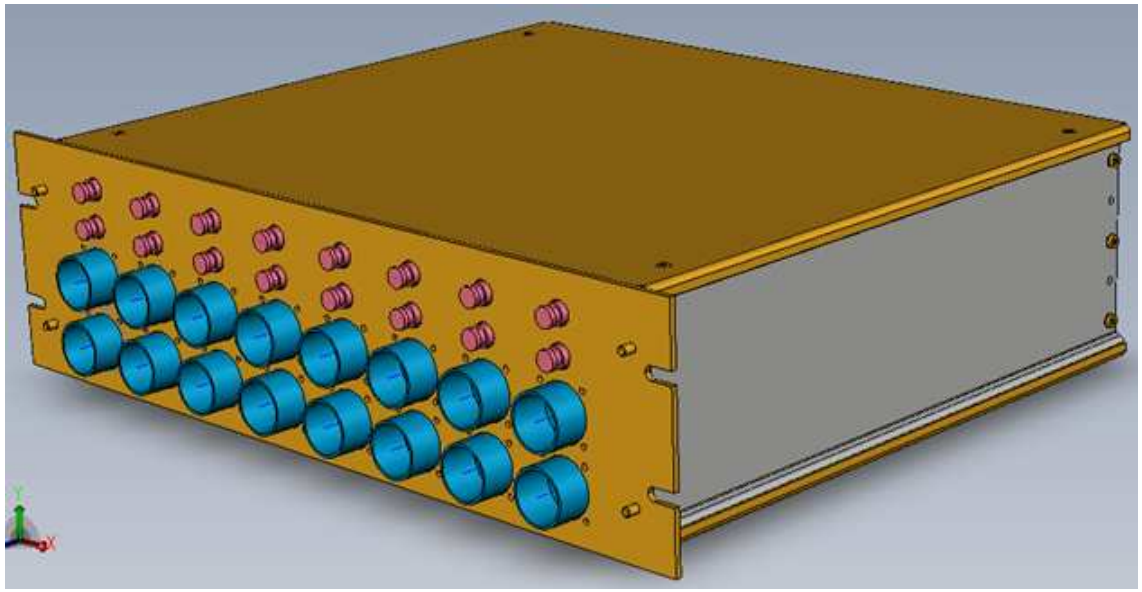

- Input Power: 115VAC (3Φ 400Hz)
  - Power from GH's AC Payload Bus
  - Same location/Input as ISS-PDU
  - Engine-powered AC Generator has fault protective circuits
- Output to Each EIP Module:
  - Switchable, protected, 115VAC (3Φ 400Hz) Circuit
  - Switchable Safety Interlock Relay
  - Fail-safe "Lost-link" capability of all Safety Interlock Relays
  - GPS (from amplified splitter)
  - IRIG-B Timecode
- APCS Network Connectivity
- Tested to GH Environmental Specs

Payload-mount Pallets

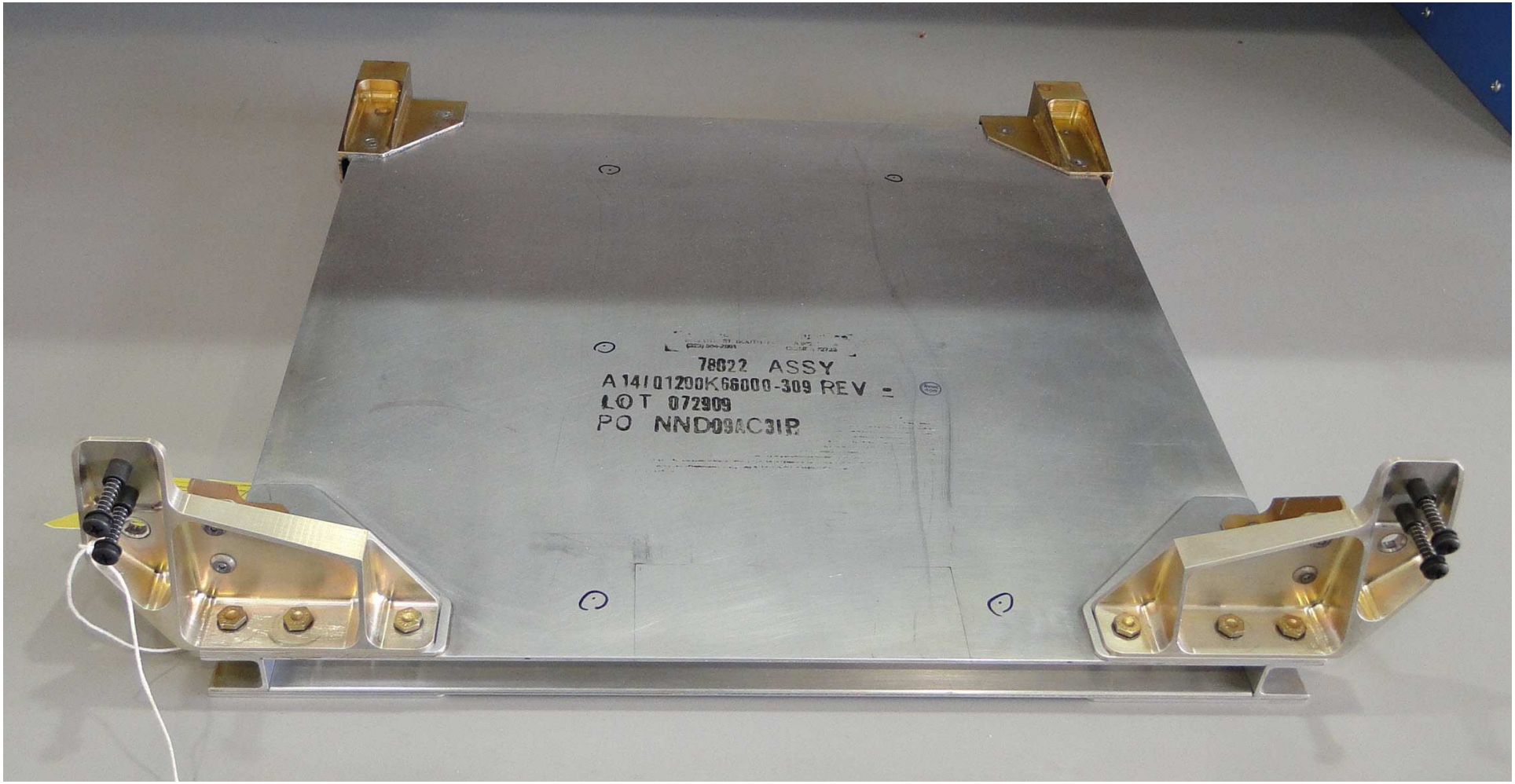

Payload-mount Pallets

Operational Items

- **DFRC Avionics will provide all harness wiring**
  - EIP Power Harness (PI provides instrument interface plug)
  - Ethernet Harness (PI provides instrument interface plug – if not RJ-45)
  - Any special instrument interbox Harnesses
- **Environmental Testing of Instrument**
  - Legacy instruments are waived if flown at similar altitudes and pressures
  - New instruments will require temp, pressure, vibration testing
    - DFRC Environmental Lab can be used
- **Communications Protocol and Opportunity**
  - Health & Status Packets are required during Instrument operation
  - Plan on using the Ku-Satcom bandwidth
    - Wide-band data communication to your ground computer
    - Real-time link to your software to enhance airborne operation

NASA
NORTHROP GRUMMAN